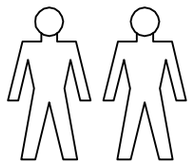

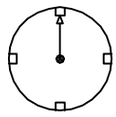

60
MNT

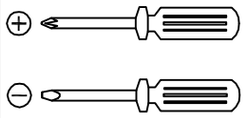

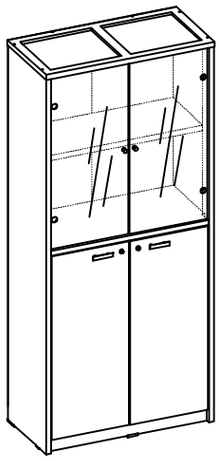

VOBC 80

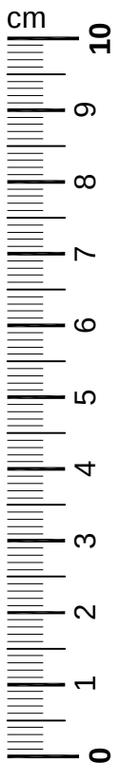

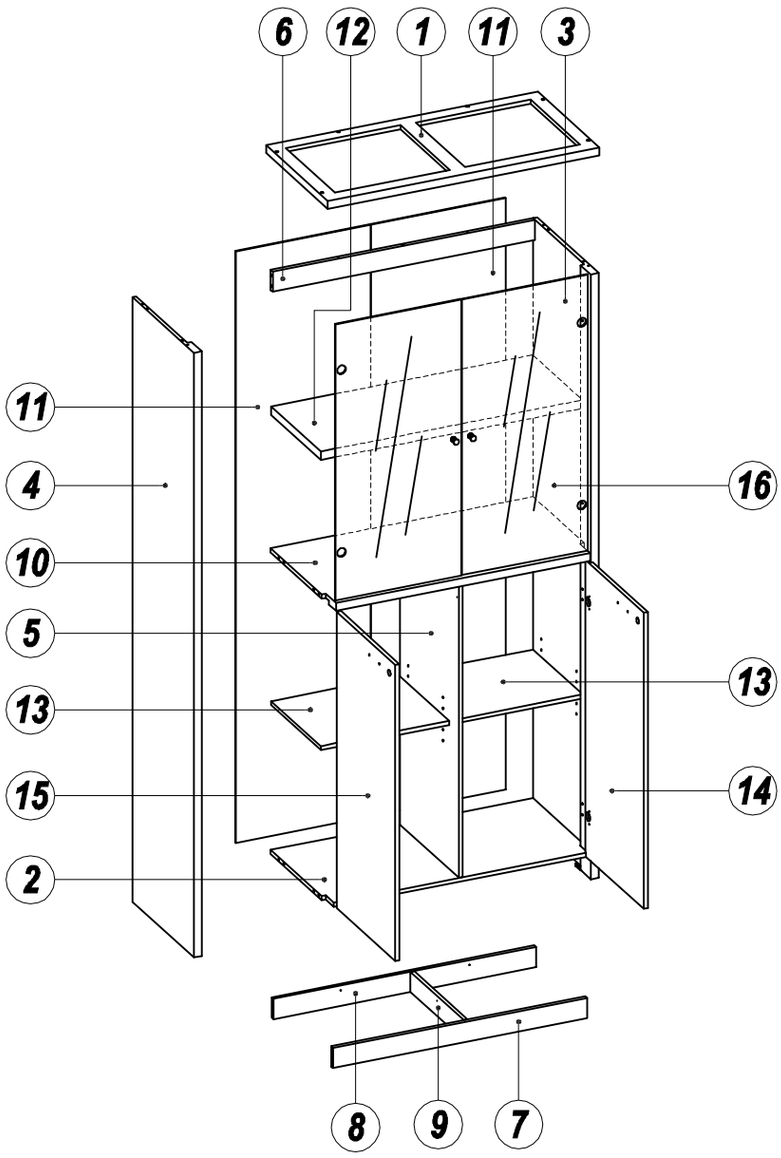

A x 12						
B x 12	C x 6	D x 19	E x 8	F x 12	G x 4	H x 4
J x 44 Ø3.5 X 12 mm	K x 2	L x 4 Ø4 X 22 mm	M x 2	N x 2 Ø4 X 13 mm	P x 7	Q x 16 Ø3.5 X 9 mm
R x 2	S x 2	T x 2	U x 2	V x 1	W x 2	Y x 58

1

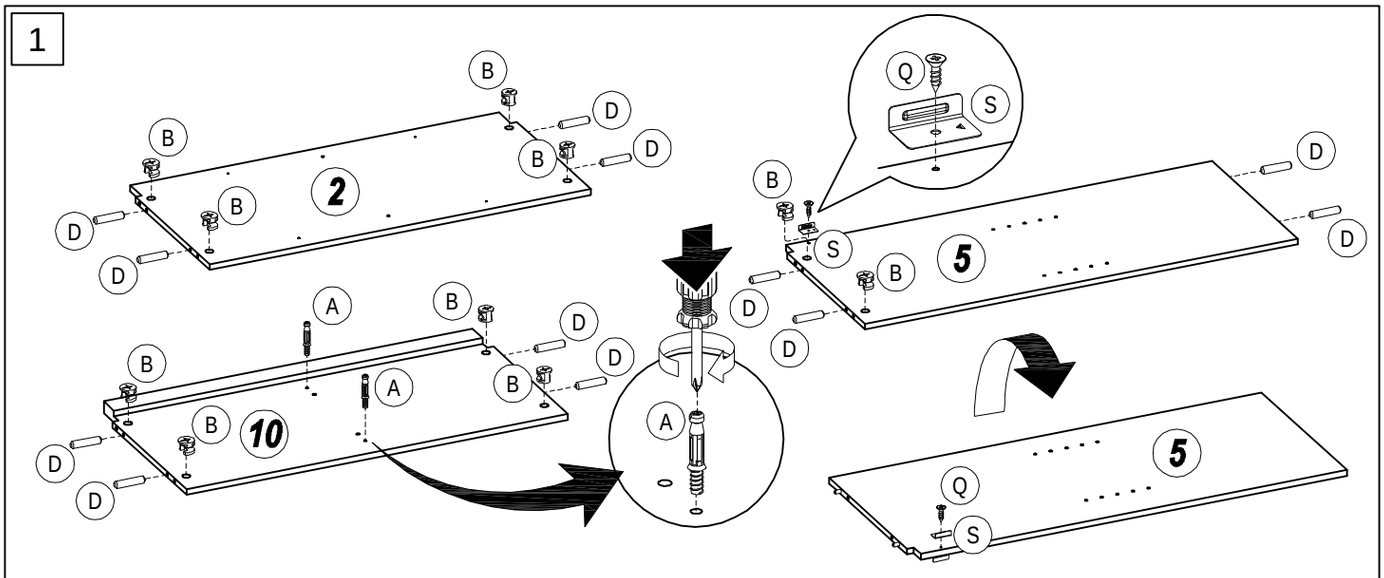

A	B	D	Q	S
x 2	x 10	x 12	x 2	x 2
			Ø3.5 X 9 mm	

2

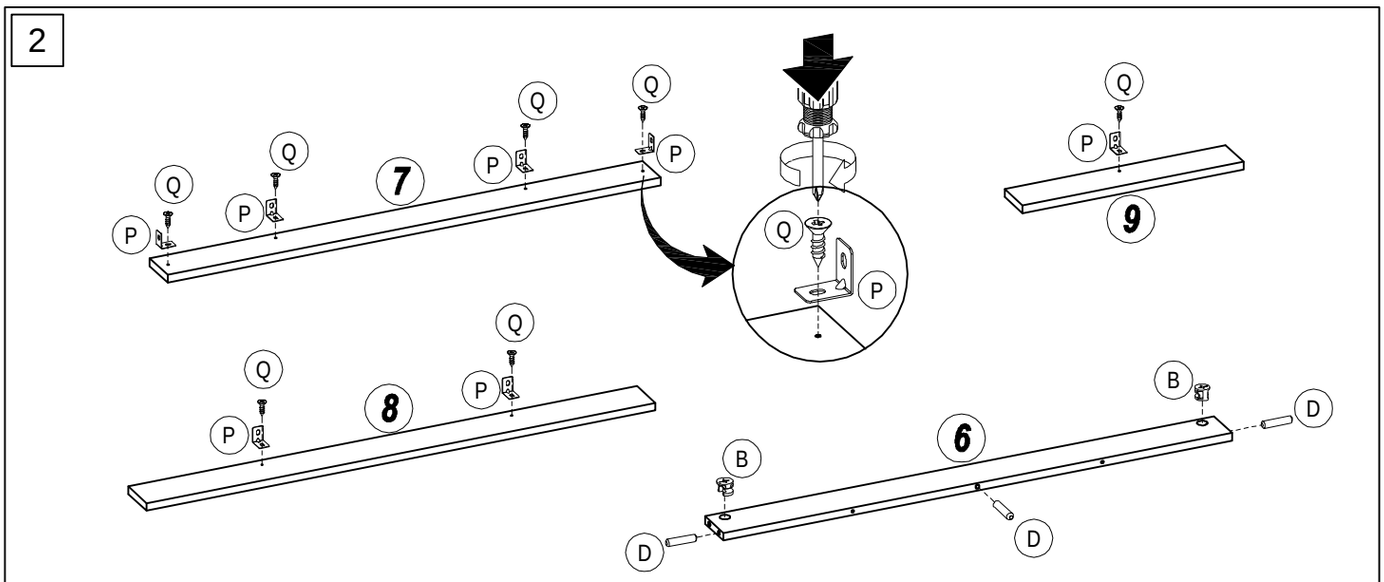

B	D	P	Q
x 2	x 3	x 7	x 7
			Ø3.5 X 9 mm

3

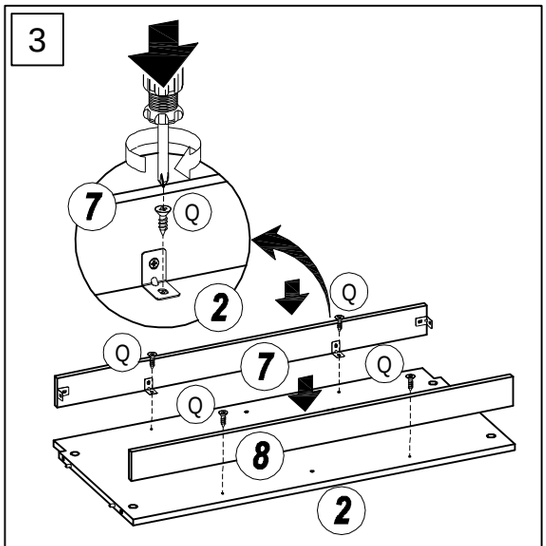

Q
x 4
Ø3.5 X 9 mm

4

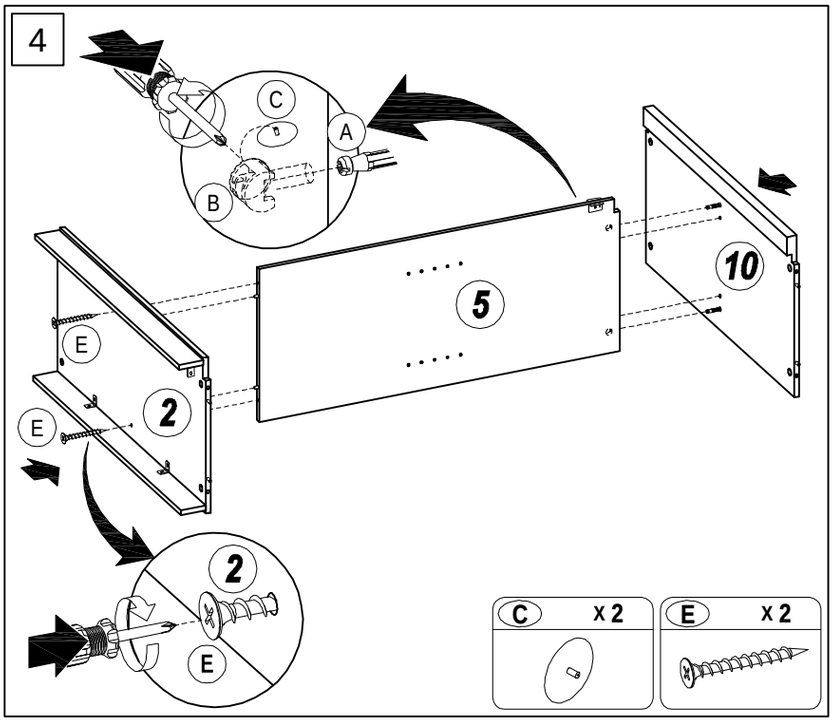

C	E
x 2	x 2

5

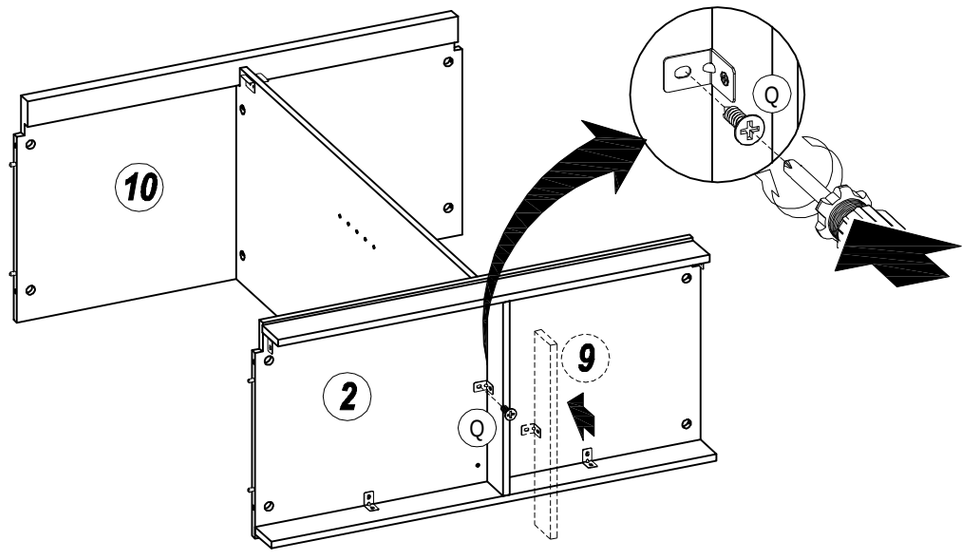

Q X 1

Ø3.5 X 9 mm

6

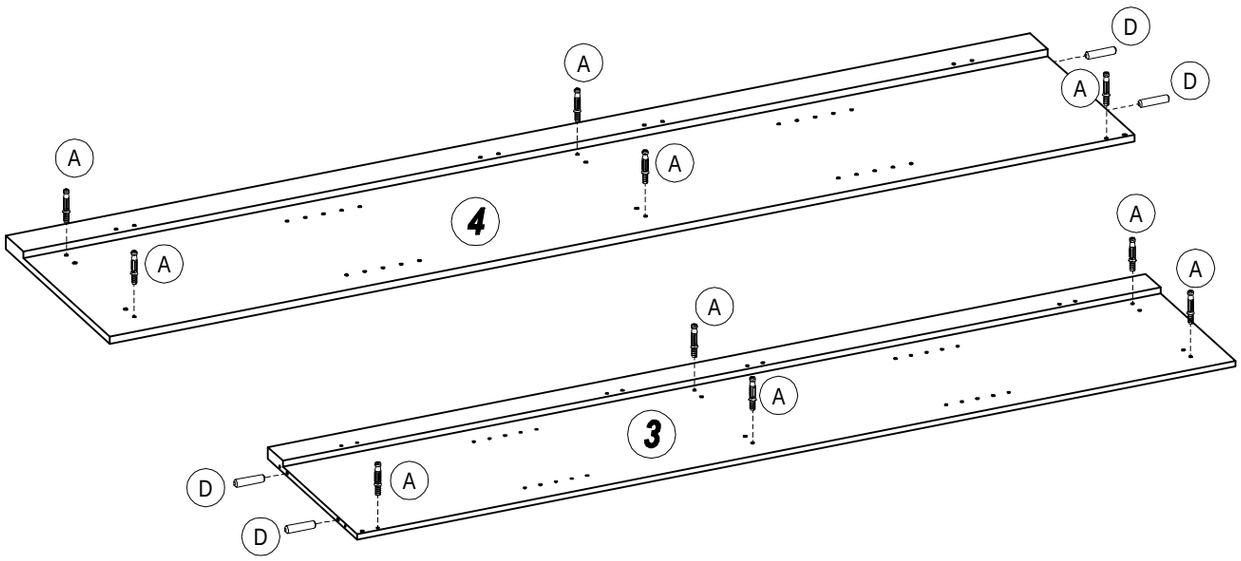

A X 10

D X 4

7

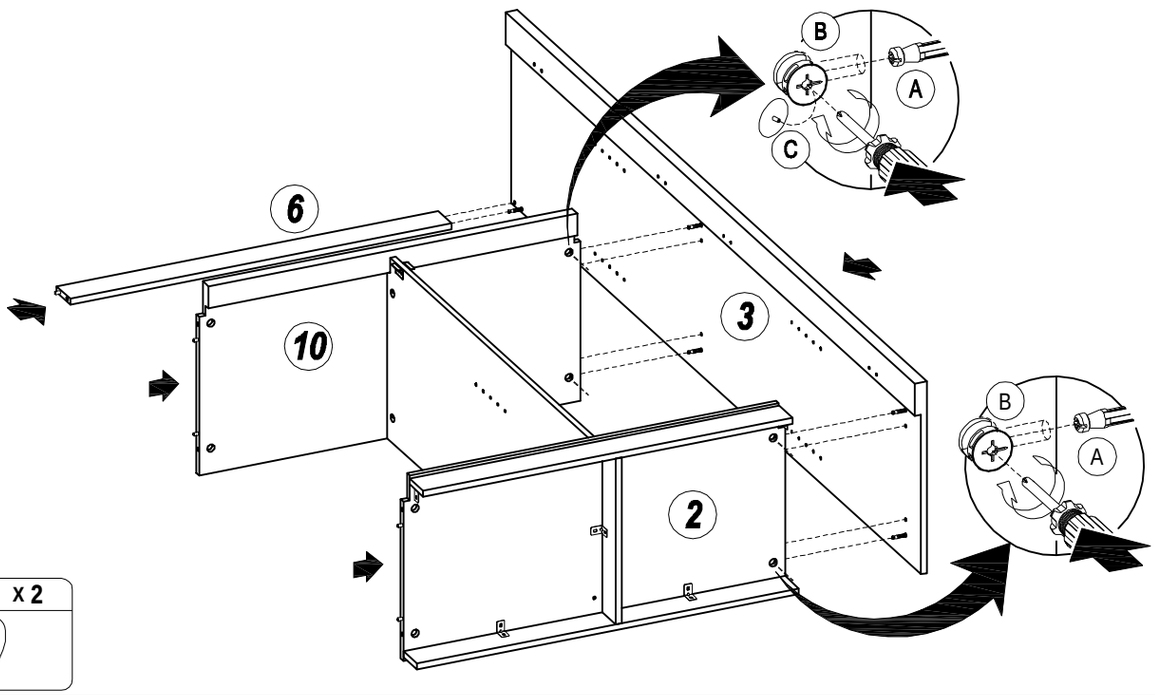

C X 2

8

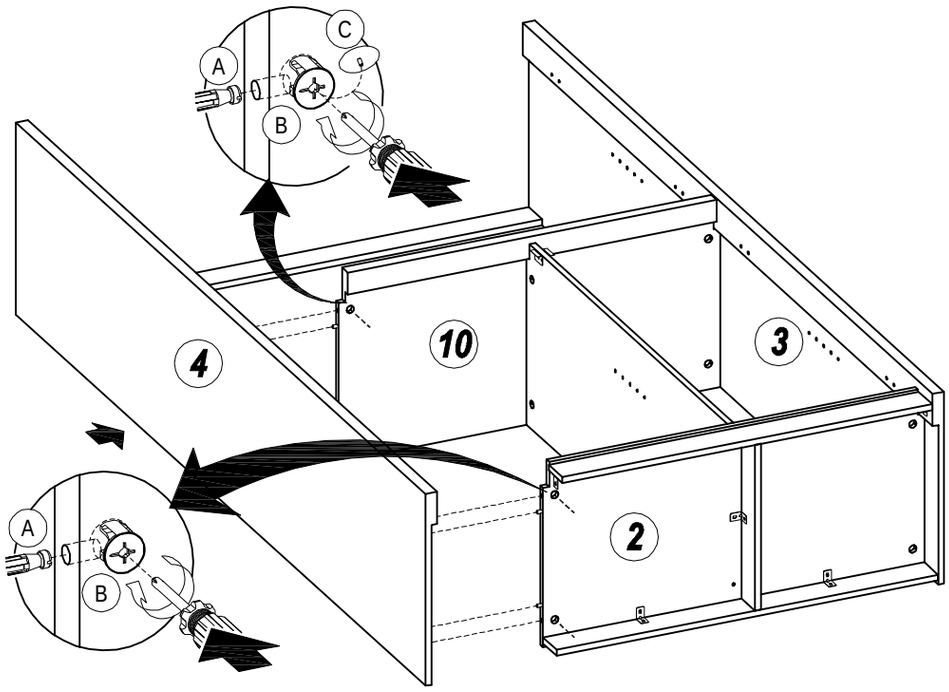

C x 2

9

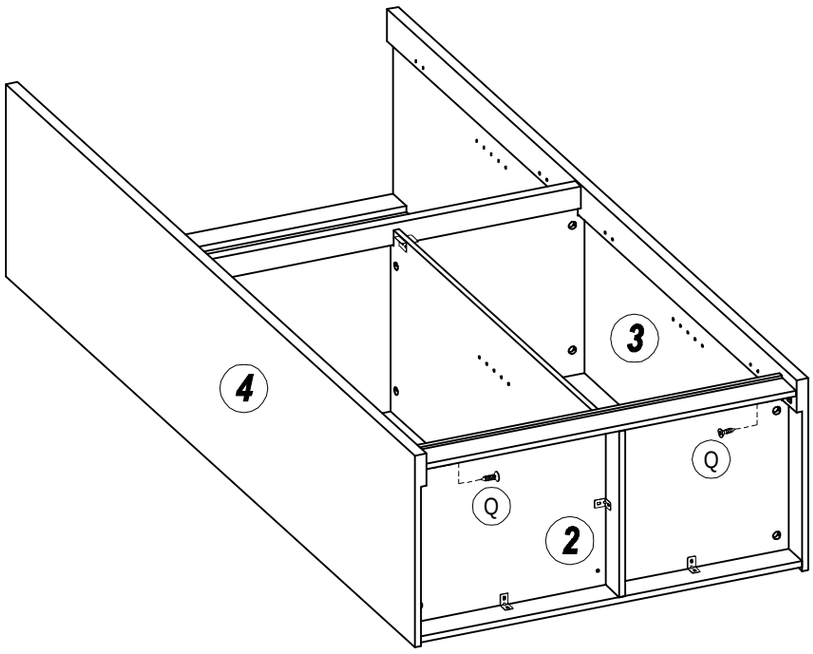

Q x 2

Ø3.5 X 9 mm

10

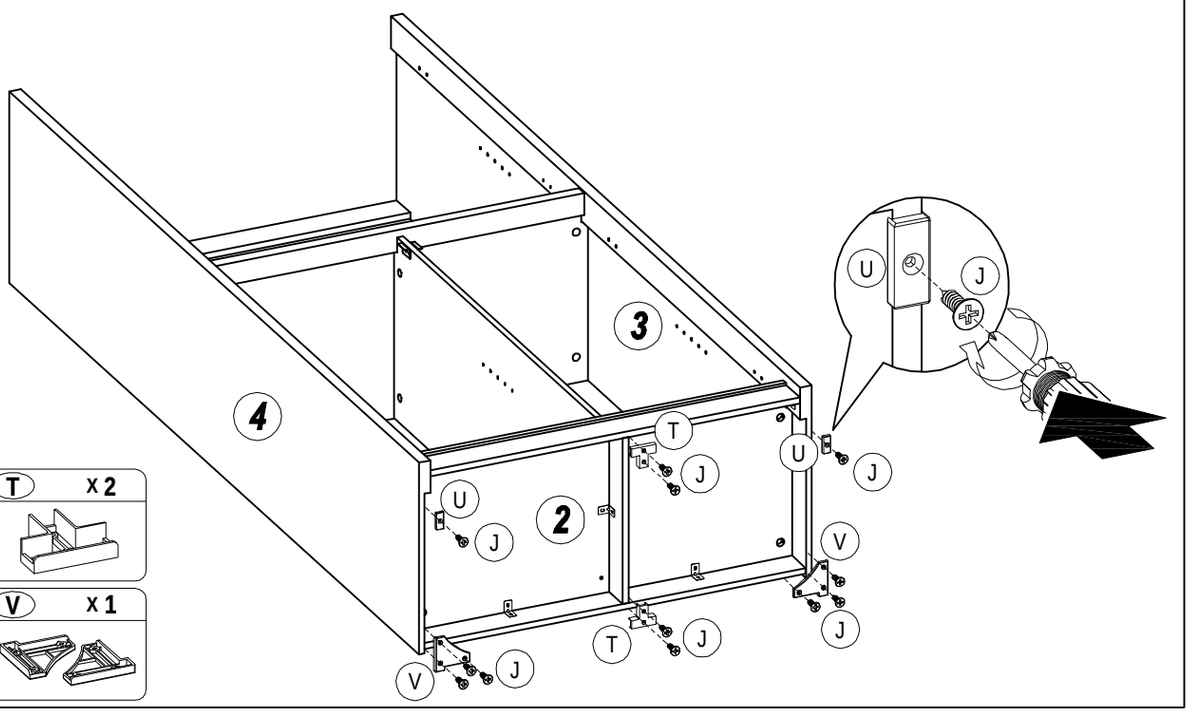

J x 12

Ø3.5 X 12 mm

T x 2

U x 2

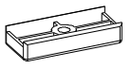

V x 1

11

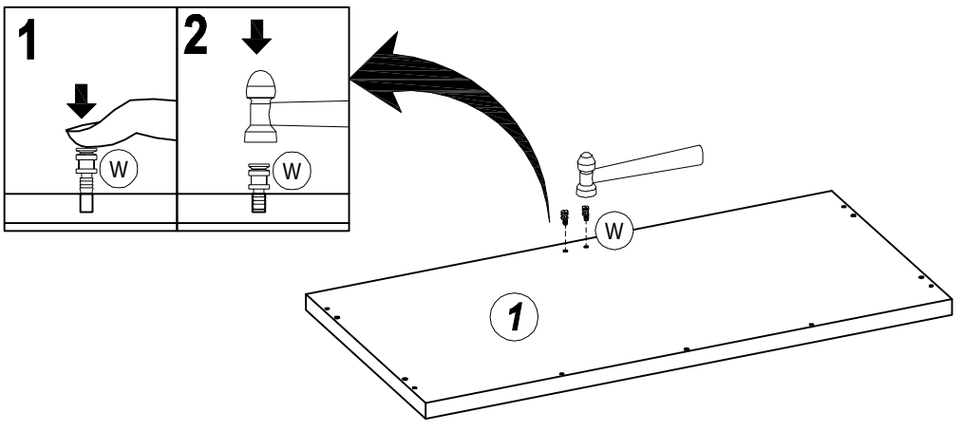

W x 2

12

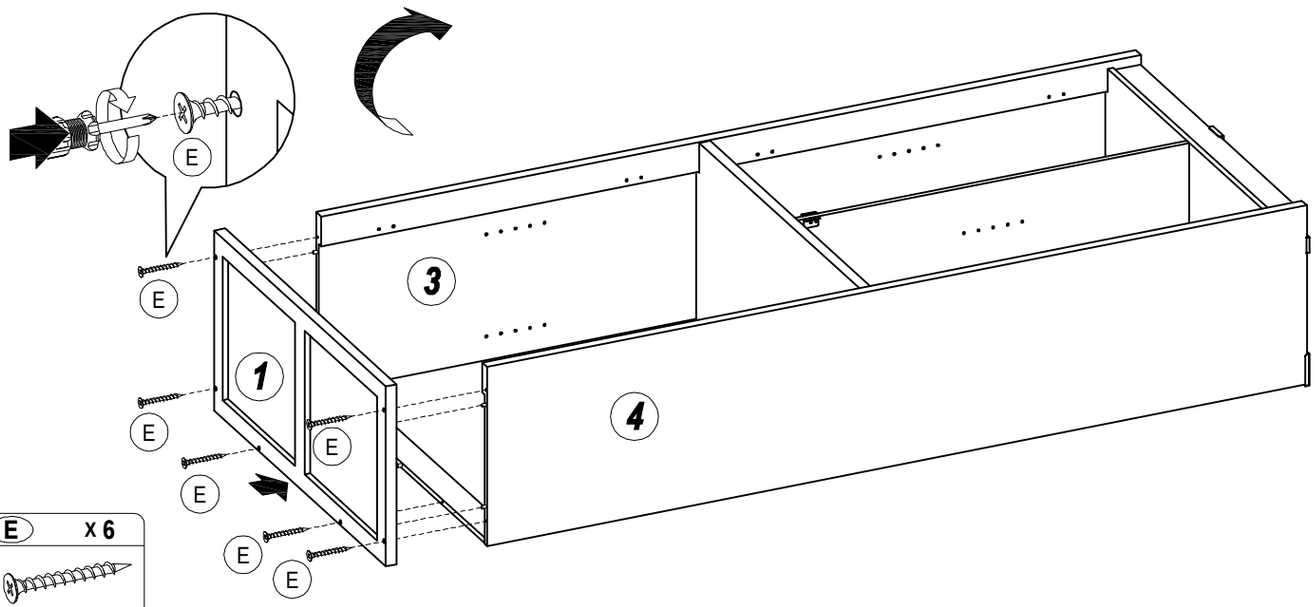

E x 6

13

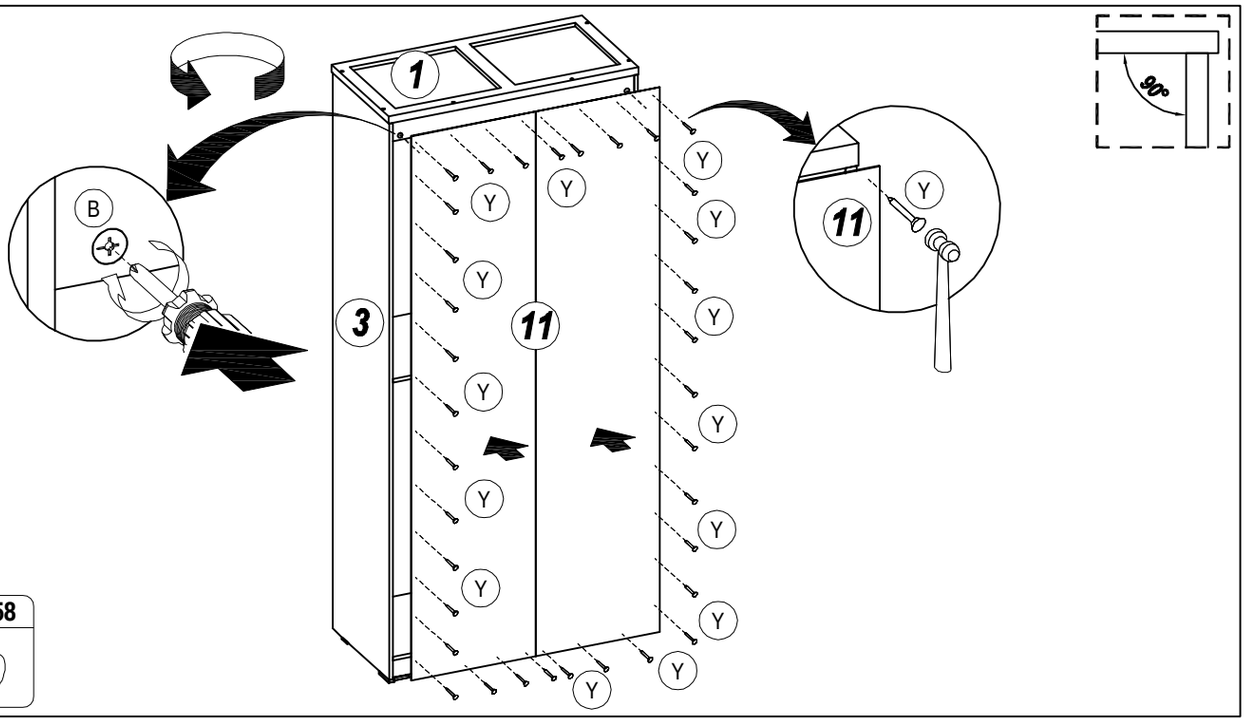

Y x 58

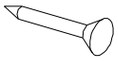

14

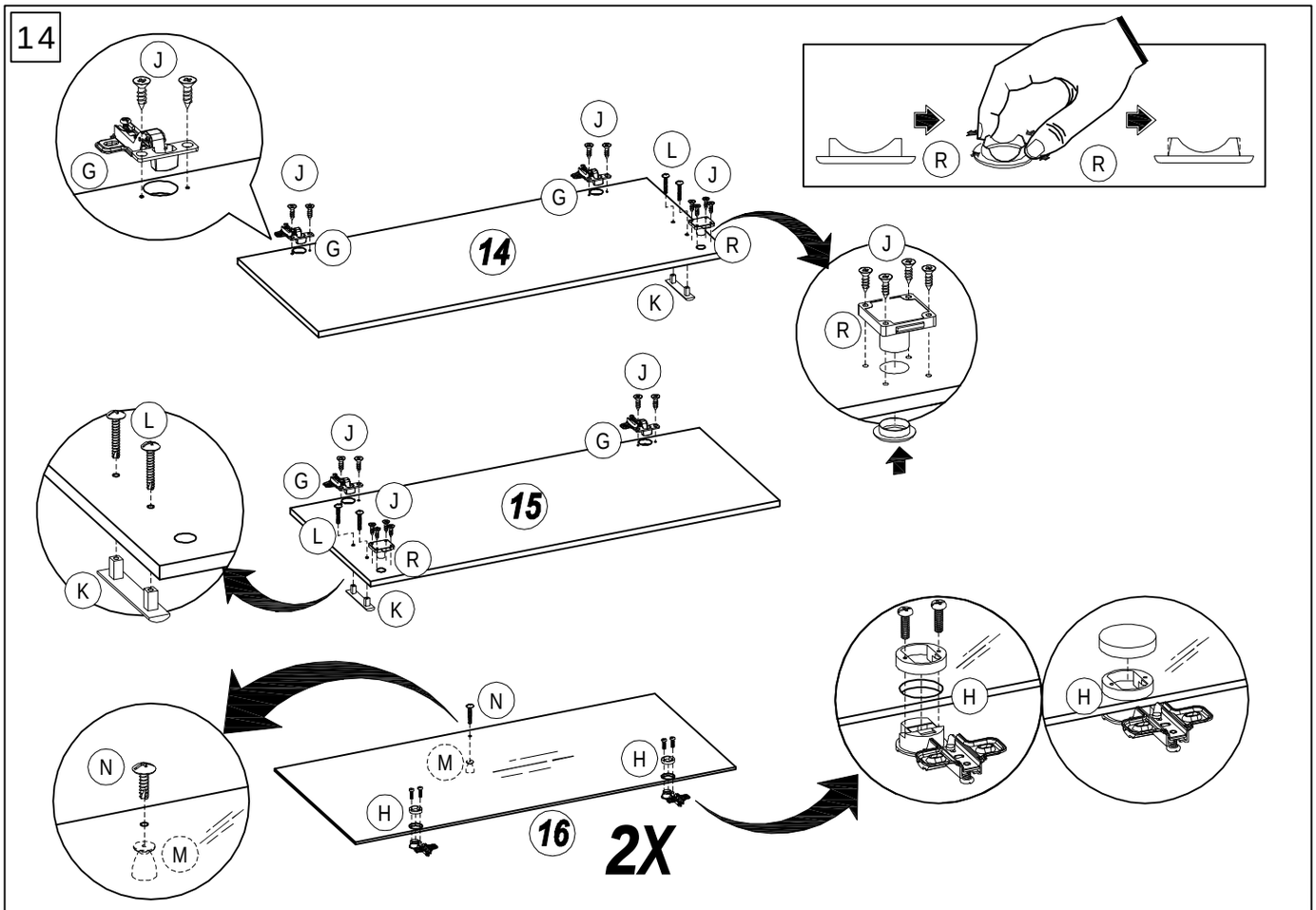

G	H	J	K	L	M	N	R
X 4	X 4	X 16	X 2	X 4	X 2	X 2	X 2
		Ø3.5 X 12 mm		Ø4 X 22 mm		Ø4 X 13 mm	

15

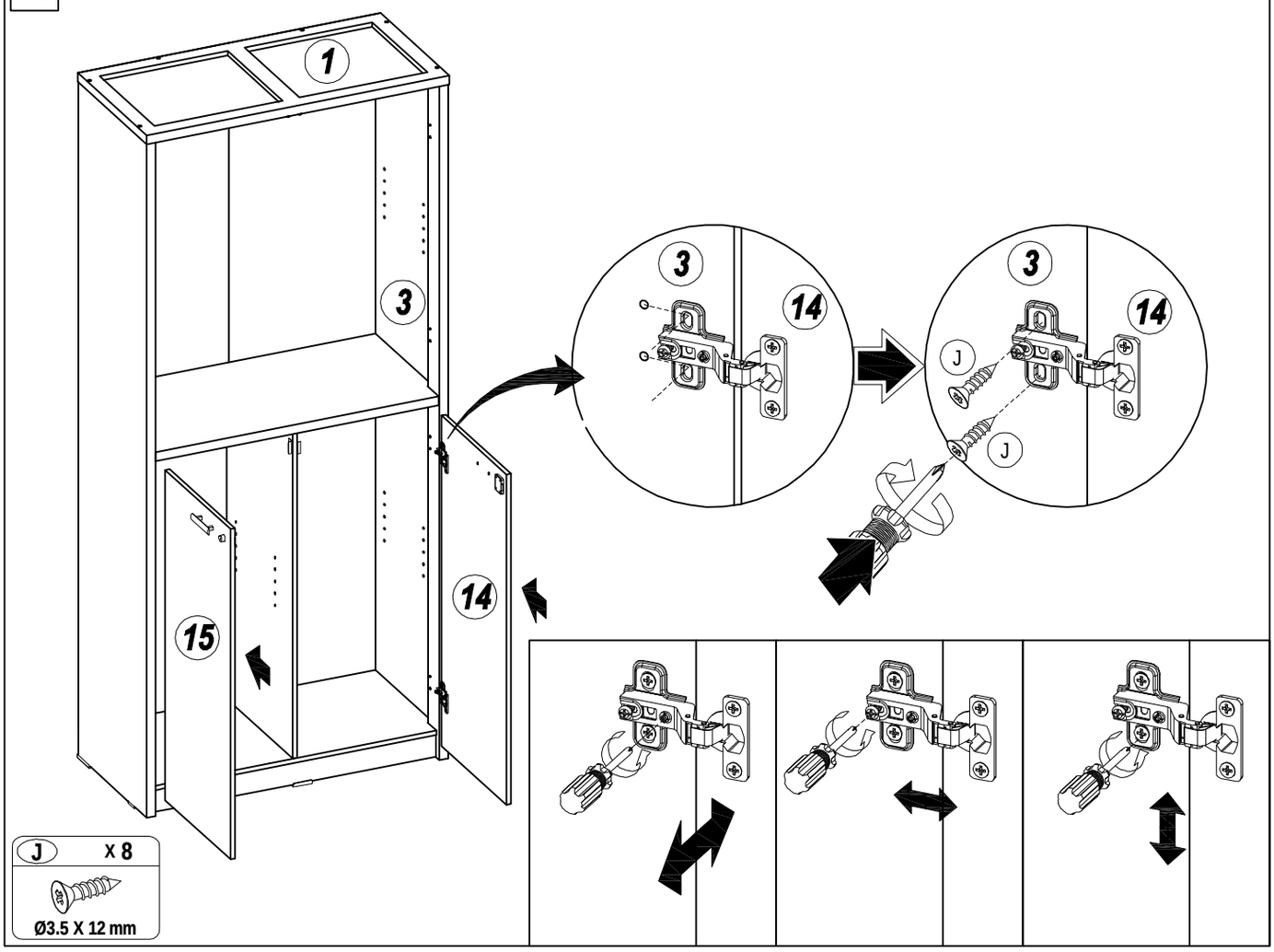

J
X 8
Ø3.5 X 12 mm

16

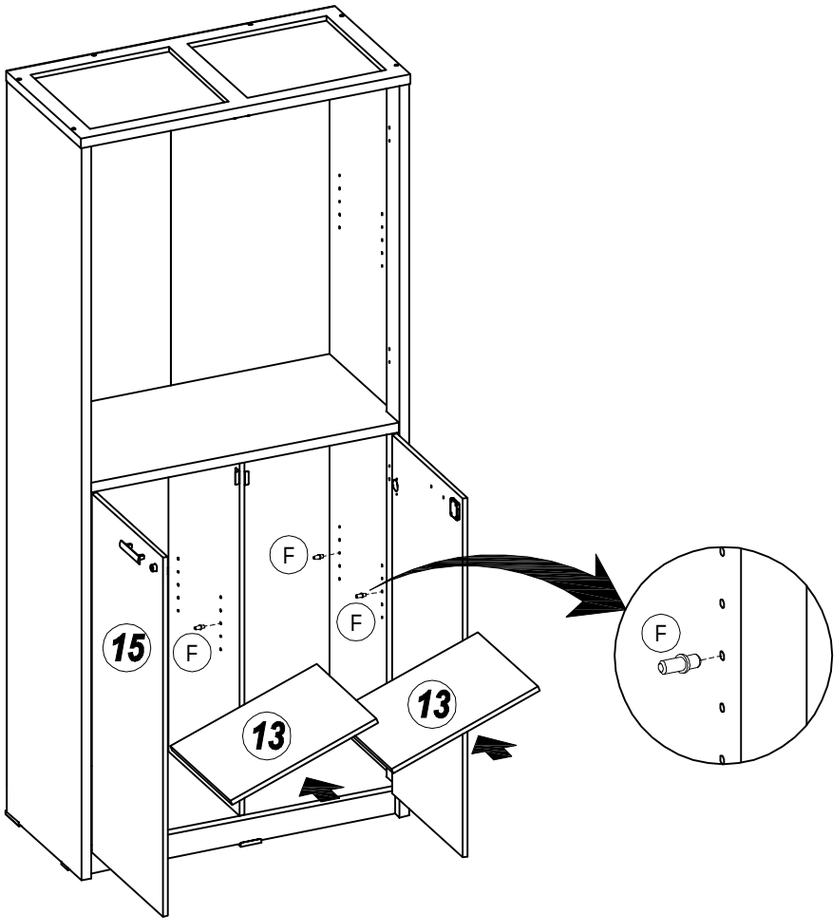
F
F
F
F
15
13
13

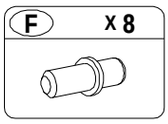
F
X 8

17

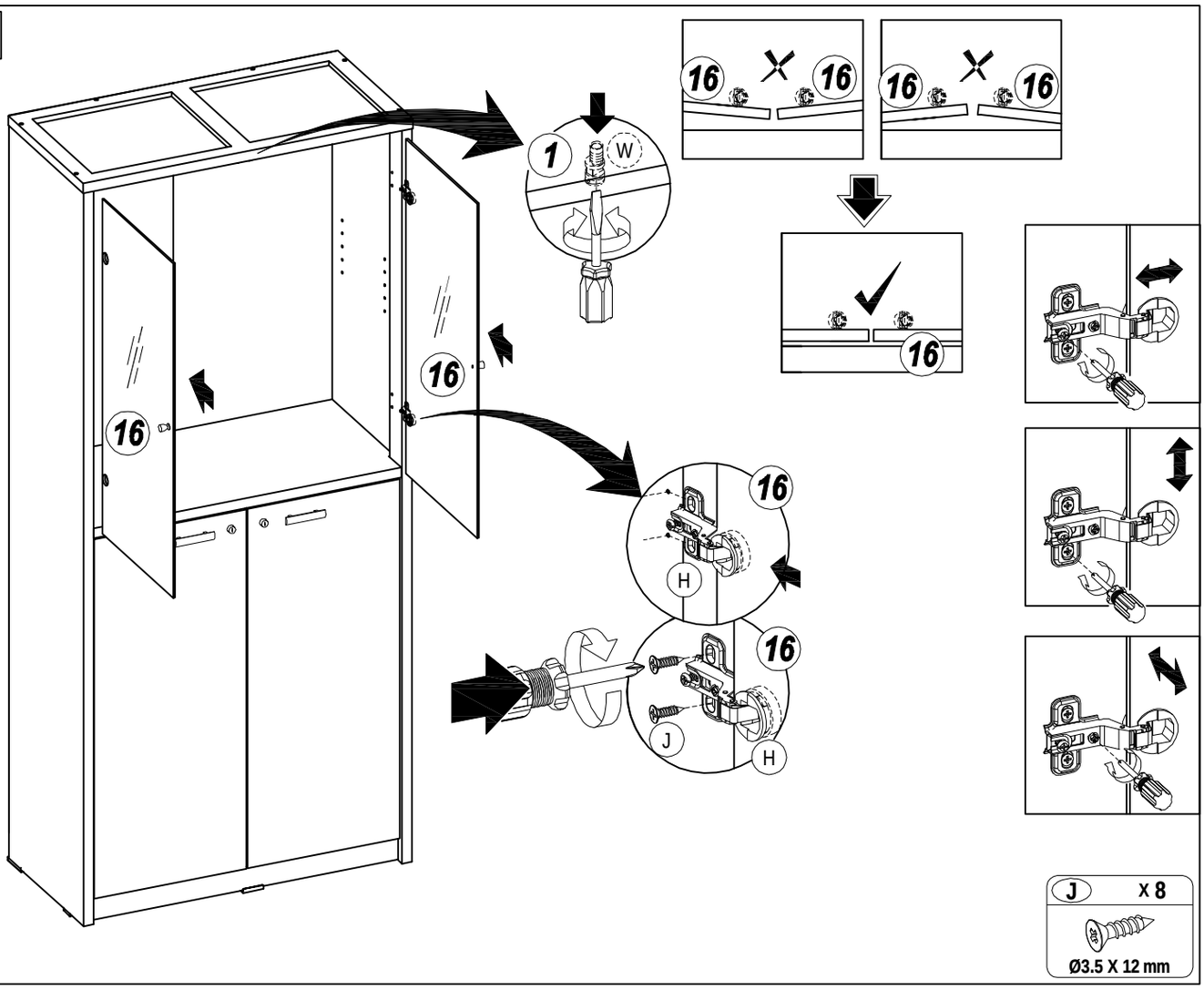
16
16
1
W
16
16
16
16
16
16
16
16
H
16
J
H
J
X 8
Ø3.5 X 12 mm

18

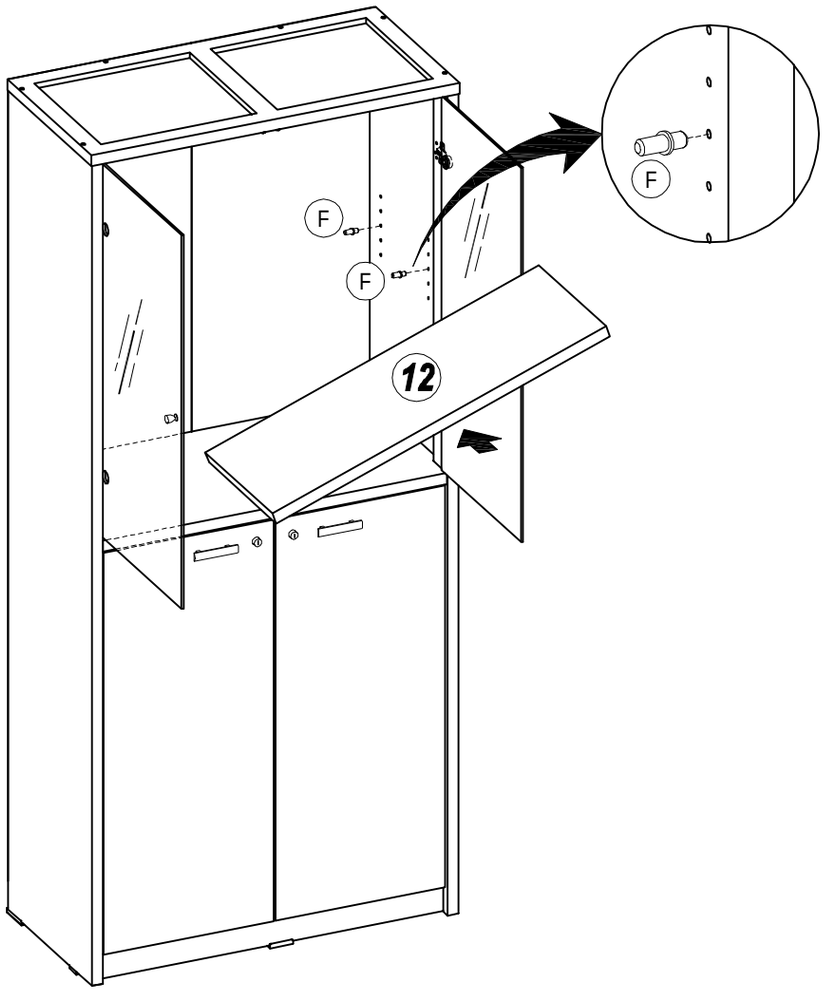

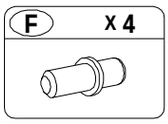
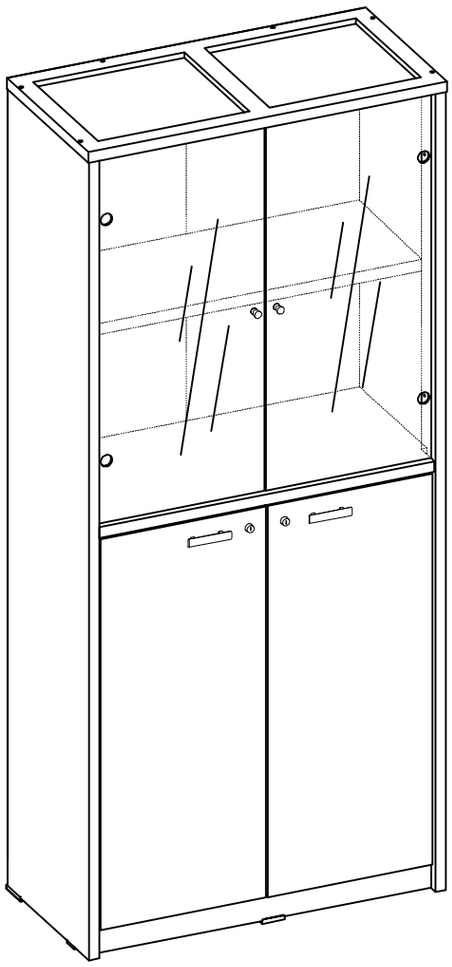
19